EIBENSTOCK
Elektrowerkzeuge

Ersatzteilliste

DSS 35 M iP / DSS 35 H iP

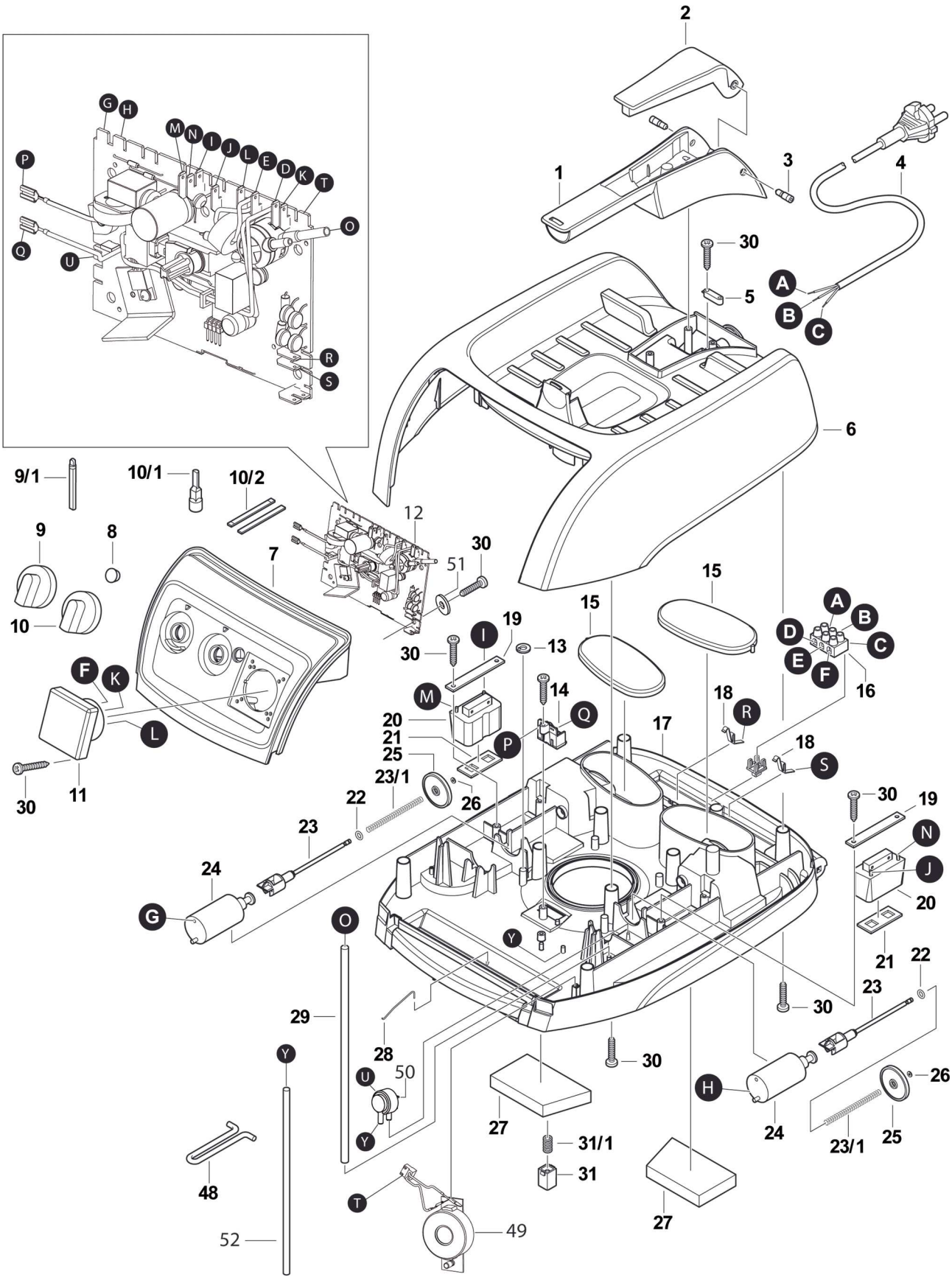

Änderungen vorbehalten!

EIBENSTOCK
Elektrowerkzeuge

Ersatzteilliste

DSS 35 M iP / DSS 35 H iP

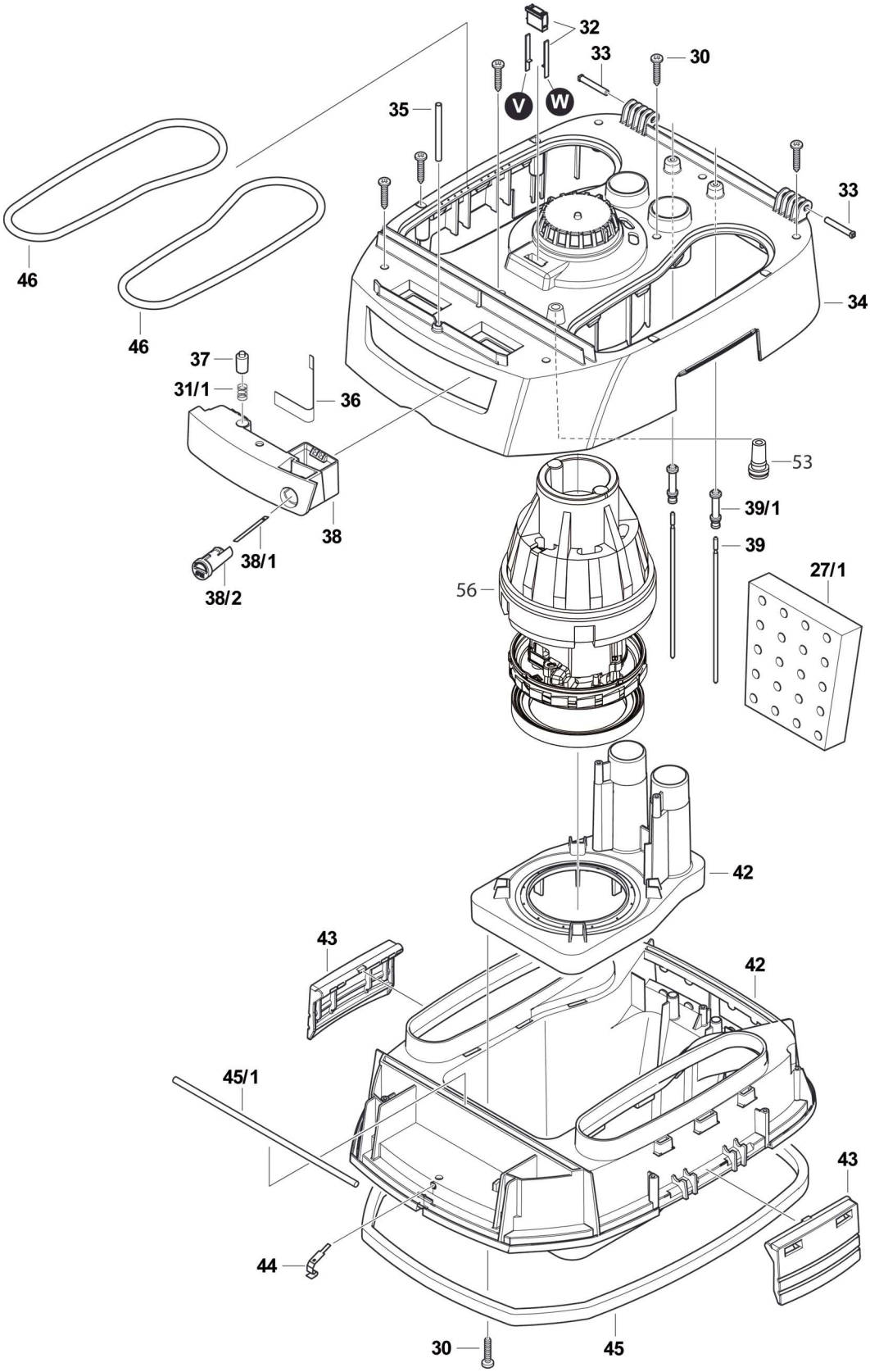

Änderungen vorbehalten!

EIBENSTOCK
Elektrowerkzeuge

Ersatzteilliste

DSS 35 M iP / DSS 35 H iP
Behälter 35 L

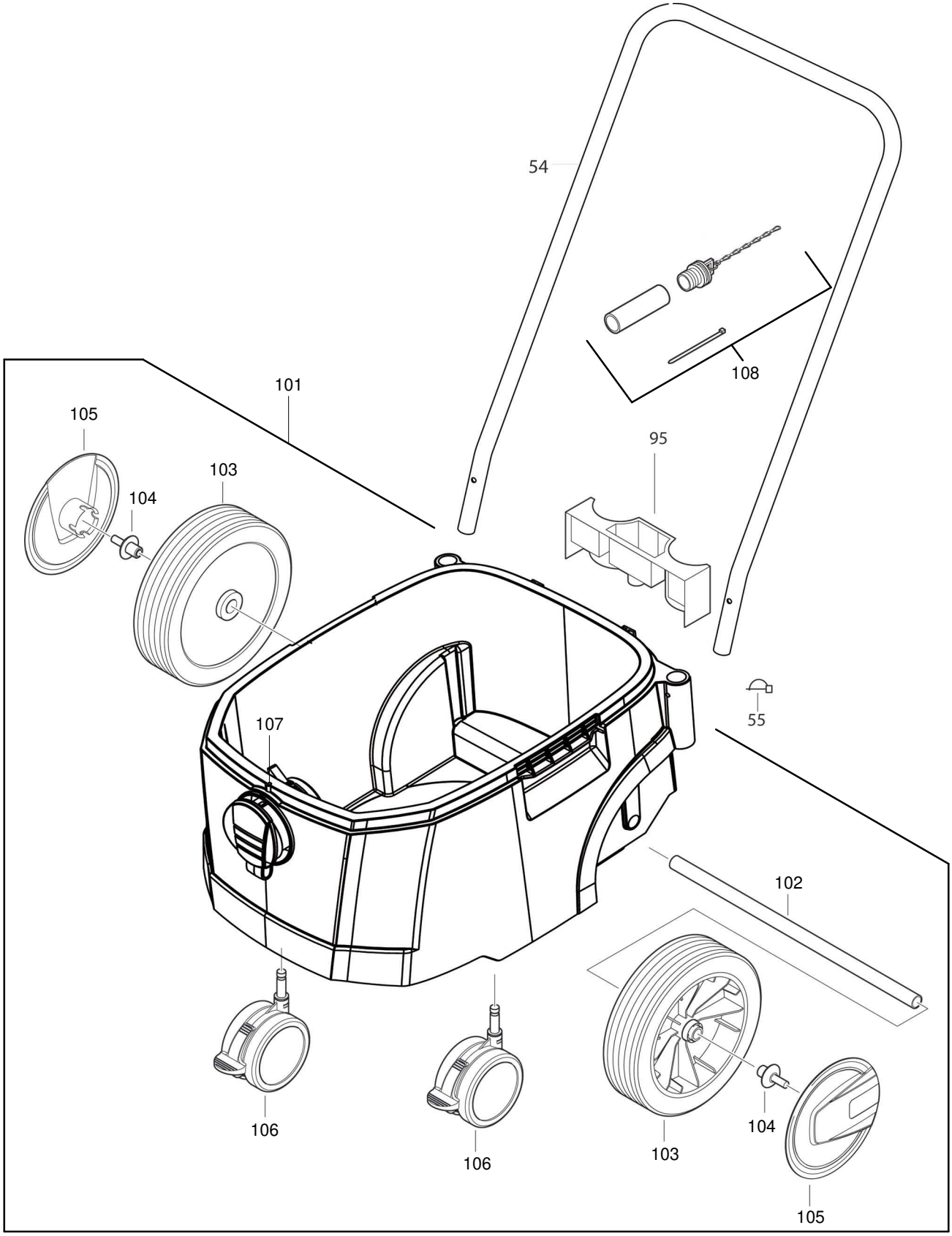

Aspirador - 09919000 - DSS_35_M_iP - EIBENSTOCK

as of serial no. : 4193 2018

Pos.	Descricao	Ref	pc.
00	"M" label	61543697	1
00	iPulse label	61590028	1
00	Specification plate	61591858	1
1+2+3	Handle+Cover plate+Bolt	61437613	1
4	Power cord	61590448	1
5	Wire locking flange	61531137	1
6	Cover housing	61510484	1
7	Front plate	61404745	1
8	Lens	61538945	1
9	Adjusting knob	61437644	1
9/1	Knob spindel long	61512501	1
10	Switch knob	61437637	1
10/1	Knob spindel short	61512471	1
10/2	Switch spring	61535531	2
11	Power tool plug socket	61546858	1
12+50+51+52	Electronic+Switch+Insulating disc+Vacuum tube	61437989	1
13	Holding disc	61536736	4
14	Motor plug socket	61417707	1
15	Cover	61510446	2
16	Luster terminal	61506104	1
17	Carrier plate	61591834	1
18	Contact bow	61535418	2
19	Holding bracket	61528595	2
20	Vibrating magnet	61690025	2
21	Sealing	61565514	2
22	O-ring	61737256	2
23	Coupling	61511184	2
24	Pull magnet	61613628	2
25	Valve disc	61511252	2
26	Retaining ring	61716619	2
27/1	Noise insulation	61510873	1
27	Motor protection filter	61510880	2
28	Contact wire	61535500	1
29	Vacuum tube	61549262	1
30	Screw 3,5x25	61706429	35
31/1+37+38+38/1+38/2	Pressure spring+Lock bar (5 pieces)	61437934	1

31	Pressure piece	61535470	4
31/1	Pressure spring	61565569	4
32	Motor plug connector	61417714	1
33	Bearing pin	61560359	2
34	Motor housing	61510033	1
35	Rivet	61723723	1
36	Flat spring	61535395	1
39	Electrode	61557113	2
39/1	Clamping piece	61557120	2
42	Lower housing	61402765	1
43	Closing latch	61510392	2
44	Discharge bridge	61510903	1
45/1	Foam rubber	61511009	1
45	Square bar sealing 10x15	61549248	1
46	Seal ring	61408781	2
48	Brace support	61513485	1
49	Signal horn	61613222	1
53	Pressure sealing	61588285	1
54	Pushing handle	61012834	1
55	Fastener spring	61543468	2
56	Motor 230V	61444918	1
95	Accessory box	61512723	1
101	Set container	61447001	1
102	Axle	61511399	1
103	Wheel	61559773	2
104	Wheel plug	61526829	2
105	Wheel trim	61518701	2
106	Caster wheel	61511405	2
107	Discharge bolt	61512549	1
108	Discharge set	61408958	1